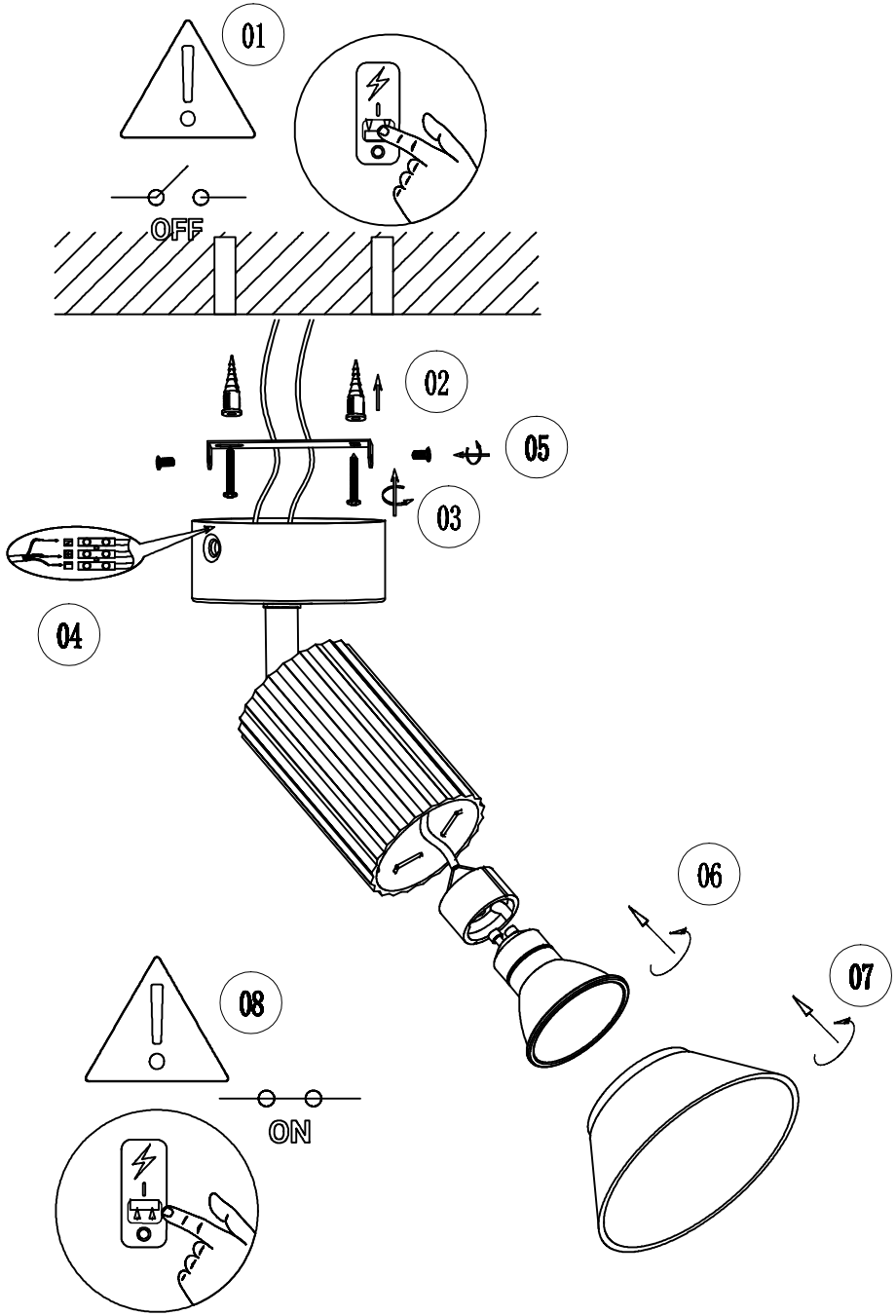
01
OFF
02
05
03
04
06
07
08
ON