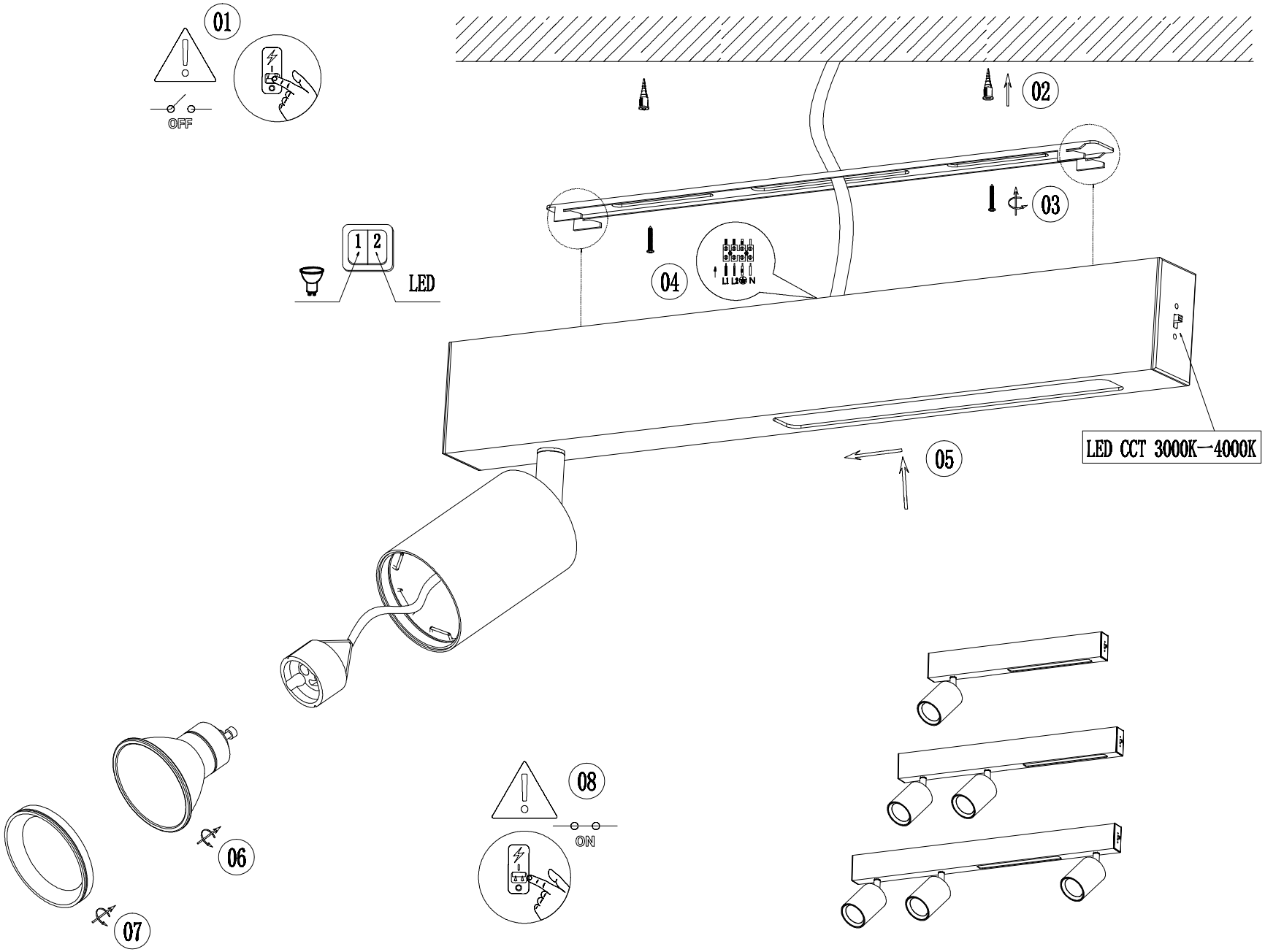
01
OFF
02
03
04
1
2
LED
L1 L2 N
05
LED CCT 3000K—4000K
06
07
08
ON