1

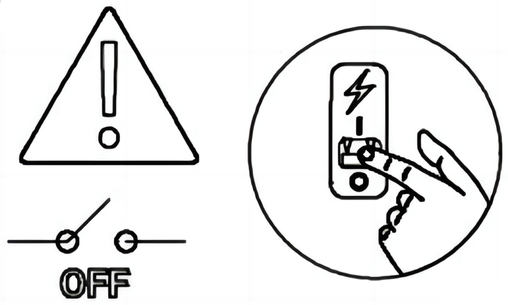

2

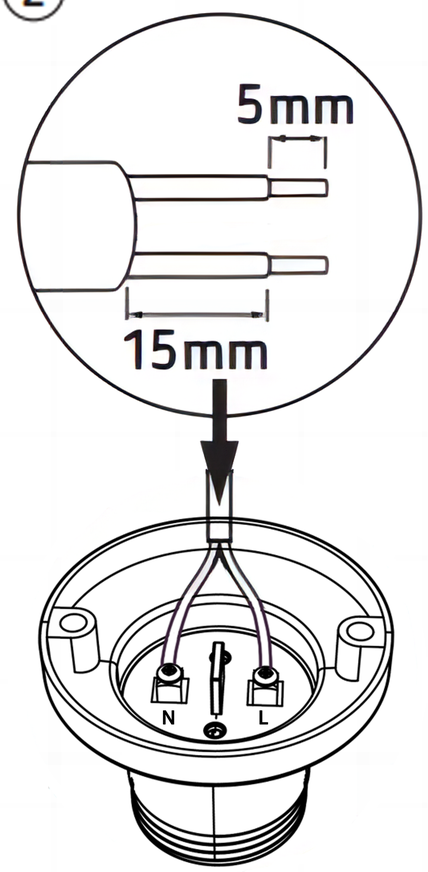

3

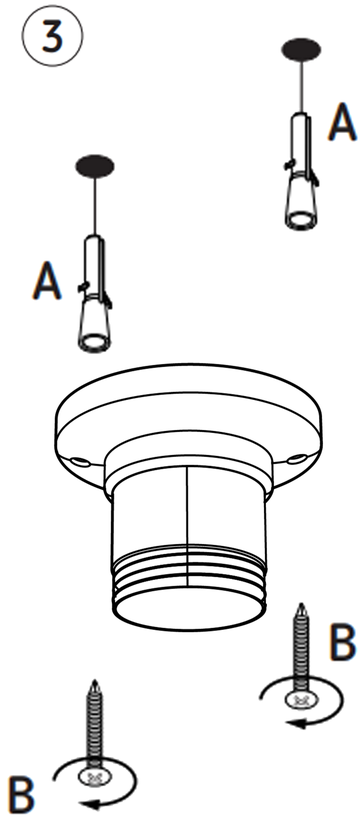

4

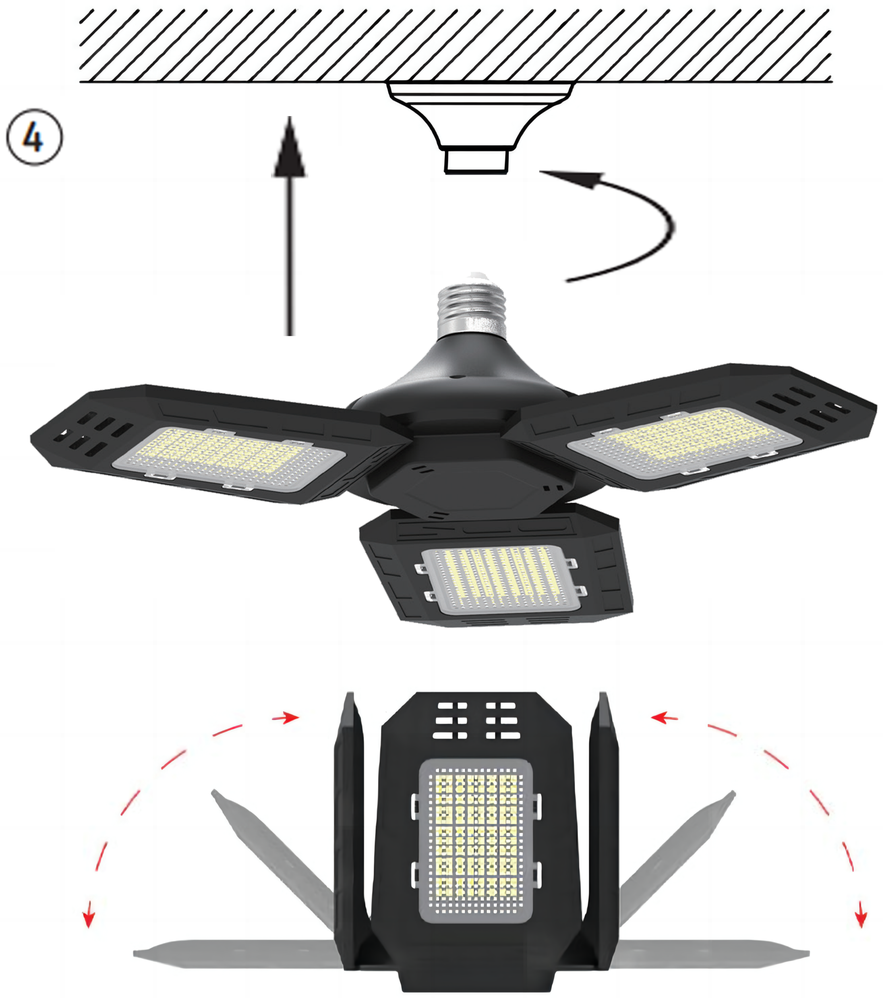

Adjustable 90°
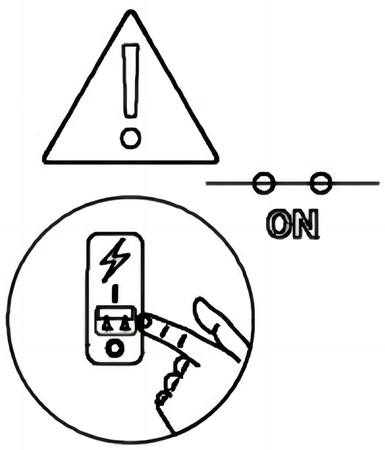
5